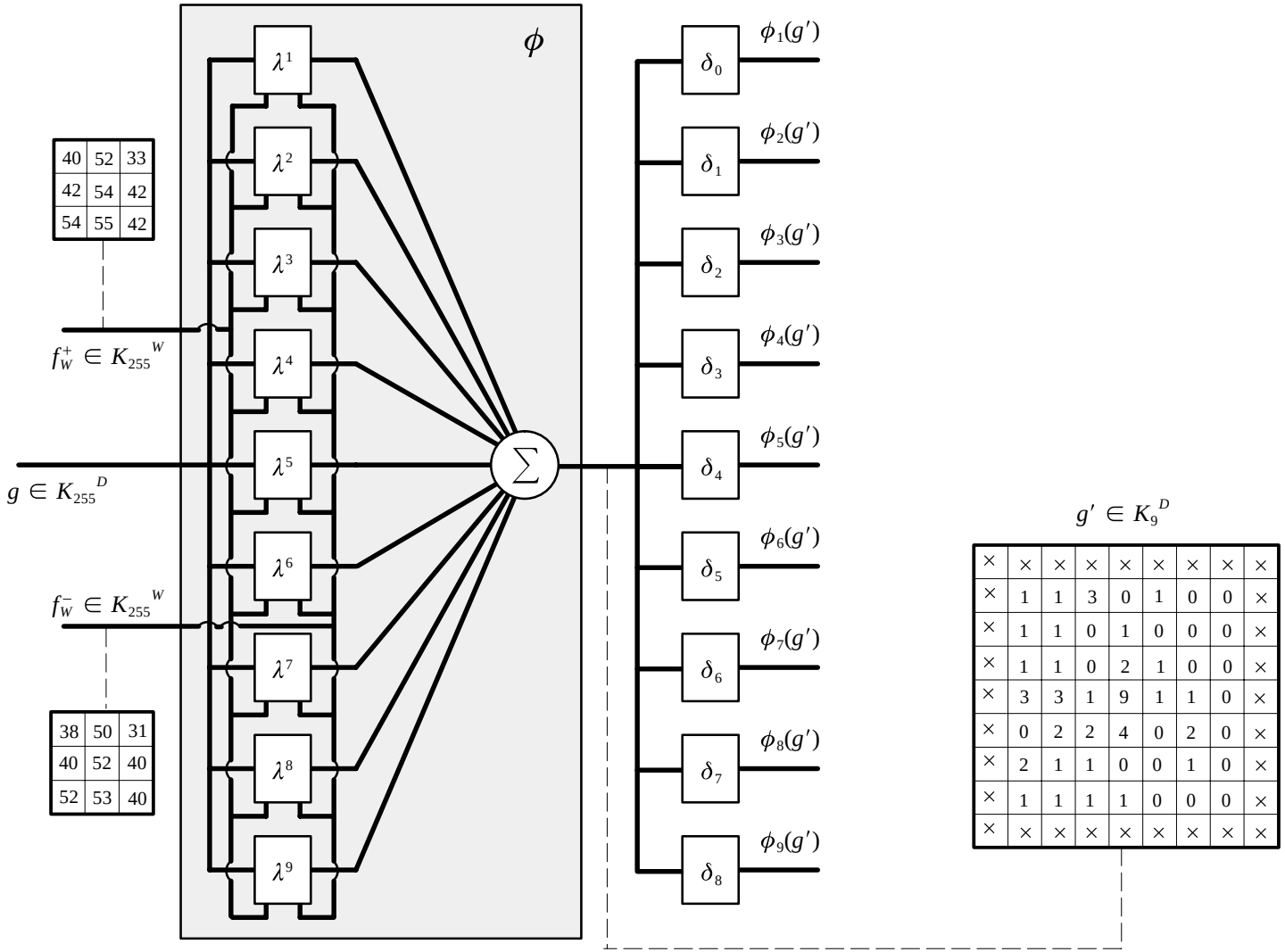

40	52	33
42	54	42
54	55	42

38	50	31
40	52	40
52	53	40

×	×	×	×	×	×	×	×	×
×	1	1	3	0	1	0	0	×
×	1	1	0	1	0	0	0	×
×	1	1	0	2	1	0	0	×
×	3	3	1	9	1	1	0	×
×	0	2	2	4	0	2	0	×
×	2	1	1	0	0	1	0	×
×	1	1	1	1	0	0	0	×
×	×	×	×	×	×	×	×	×